COMPUTERIZED DRAWING
NO MANUAL REVISIONS
PERMITTED

LET	DRAWING RELEASE OR BRIEF DESCRIPTION OF CHANGE	BY	DATE

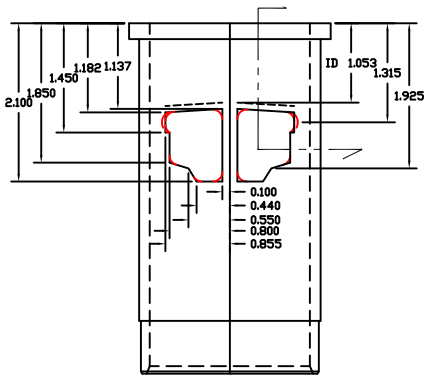

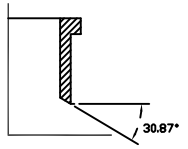

EX. SECTION

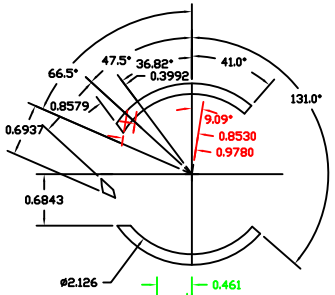

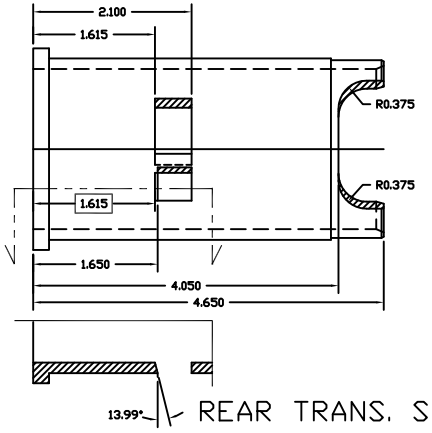

REAR TRANS. SECTION

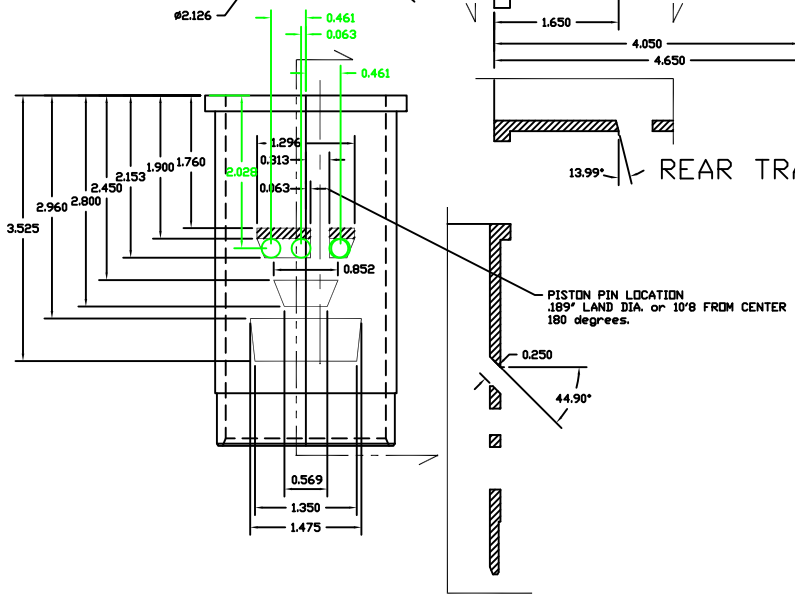

INTAKE/BOOST SECTION

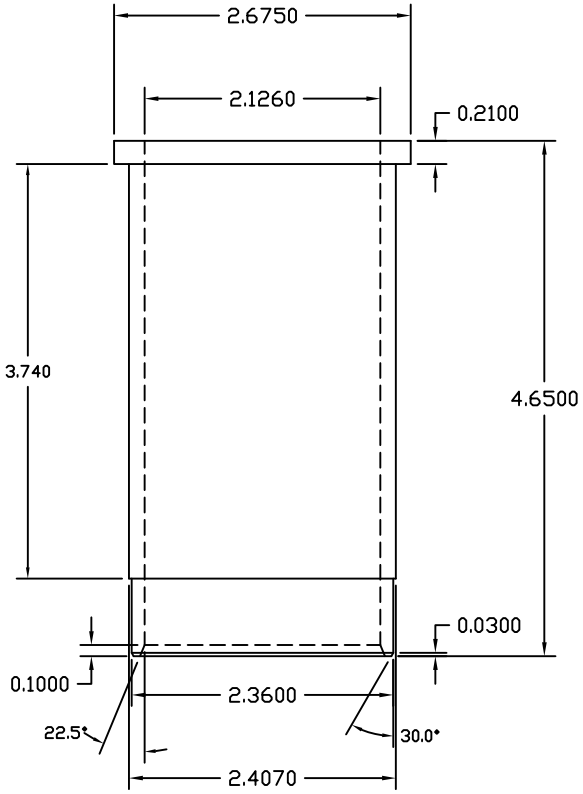

DRW. BY P. DELMATOFF | DATE 8-9-96 | Q.C. M.H.D

UNLESS OTHERWISE SPECIFIED

2 PL. DEC. +/- .015
3 PL. DEC. +/- .005
4 PL. DEC. +/- .0005
ANGLE +/- 1deg

THE INFORMATION CONTAINED IN THIS DRAWING IS CONFIDENTIAL AND PROPRIETARY TO LOS ANGELES SLEEVE CO. ,INC. AND IS NOT TO BE RELEASED WITHOUT EXPRESS PERMISSION FROM POWER PRODUCTS DIVISION OR ENGINEERING.

LOS ANGELES SLEEVE CO., INC.

12051 RIVERA ROAD
SANTA FE SPRINGS, CALIFORNIA
90670

DO NOT SCALE
DWG. SIZE D
SCALE = 1:1

PART NO. FL7022

PART NO.